City of Chesapeake – Dominion Boulevard Improvements

Presented to:

ASHE Greater Hampton Roads Chapter

March 19, 2013

By Kevin Lundgren, Mike Prezioso, and Winchester Falbe

Chesapeake VIRGINIA

Construction Team

- Owner: City of Chesapeake
- Contractor: DBC Constructors – a Joint Venture of EV Williams/McLean/RR Dawson/Bryant
- CM/CE&I Team: MBP/Baker/GET/NXL/F&R
- Designer: Parsons Brinckerhoff

Construction Contract - C501 plus C502

- Low bid of $188m from JV of EV Williams/ McLean/ RR Dawson/ Bryant
- NTP – January 7, 2013
- Completion Date of April 1, 2017

Project Benefits

- No Bridge openings
- No stop lights between Grassfield Parkway and the Interstate
- Four lanes
- Enhanced safety due to less congestion, fewer stops, better access, etc.
- Pedestrian walkway/bike path across the bridge
- Improved hurricane evacuation
- Faster public safety response times
- Overall reduced travel time

Project Limits

Project Schedule by Bridge

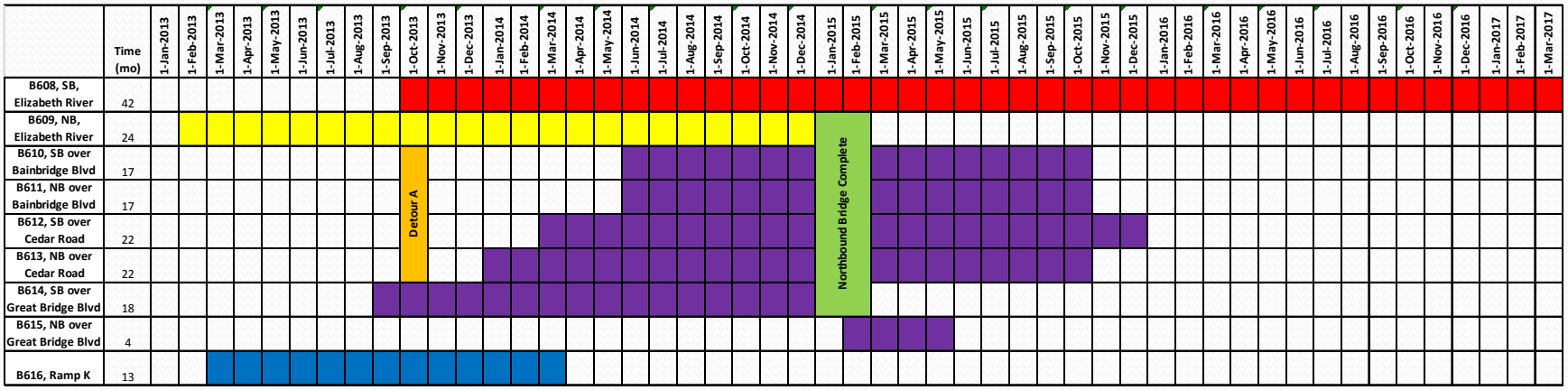

Structures Overview

- 9 Bridges
  - 105 spans
  - 1,532 precast piles
  - 81 test piles

- 16 MSE Walls – over 10,200 lf
- 4 Soil Nail Walls – 525 lf
- 4 CIP Retaining Walls
- 1,700 lf of Sound Barrier Walls
- Ground Improvements
  - 637 precast piles

Route 17 Over S. Branch Elizabeth River – B608/B609

Bridge Features - Route 17 over Elizabeth River (NB – B609/SB – B608)

- B609: 5,200' long with 42 Total Spans
- B608: 6,000' long with 51 Total Spans
- 3-span Navigation Unit of 222'-285'-222' (spliced girders) with 95 feet of Vert. Clearance
- One Fender system in Elizabeth River with 125 feet of Horizontal Clearance
- 434, PCBT-77 and PCBT-45 Prestressed Concrete Girders in Approach Spans, f'c = 10ksi
- 42 Dynamic Pile Tests (Friction Piles)
- 1,265 Driven Precast Concrete Piles – 16", 24" and 30" Square
- 10'-4" shared use path - SB

Southbound, Unit D – Typical Section

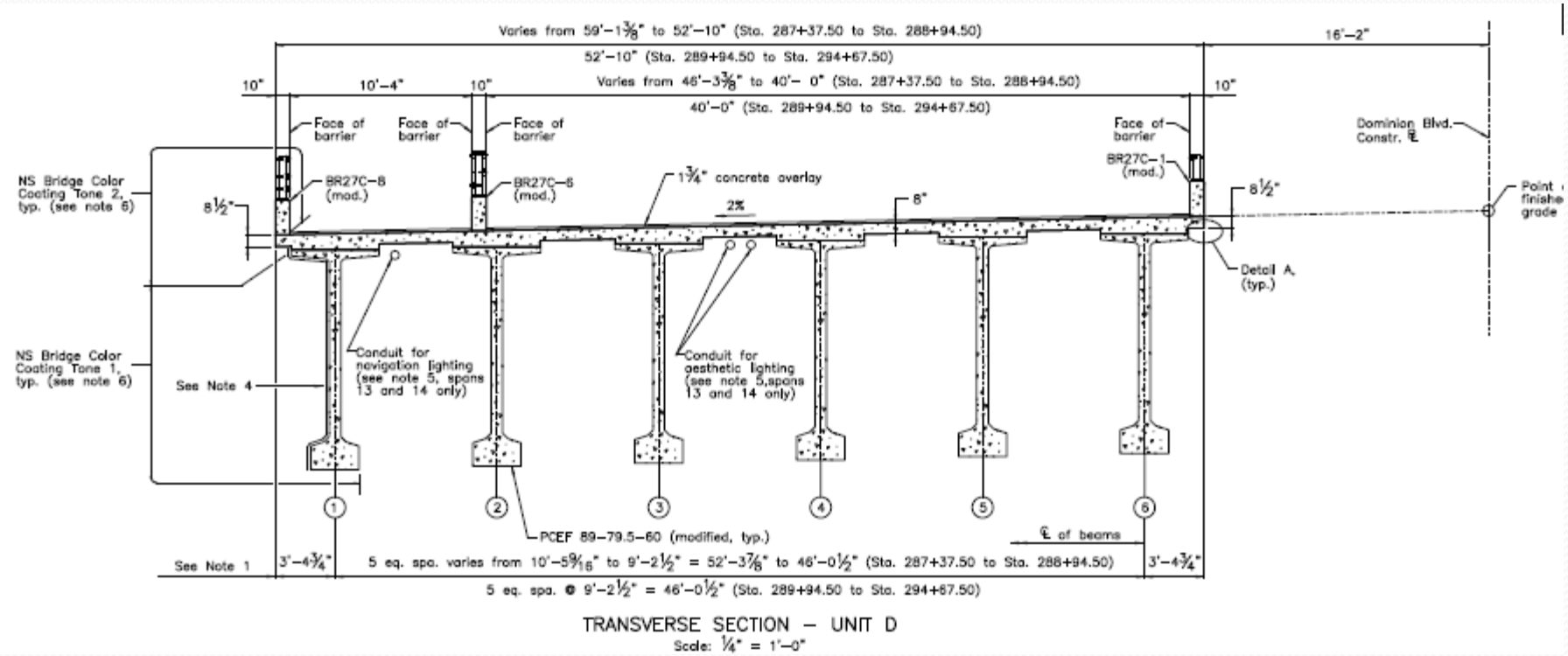

Current Progress – B609 NB (1 of 2)

Current Progress – B609 NB (2 of 2)

Spliced Girder Construction - Stages

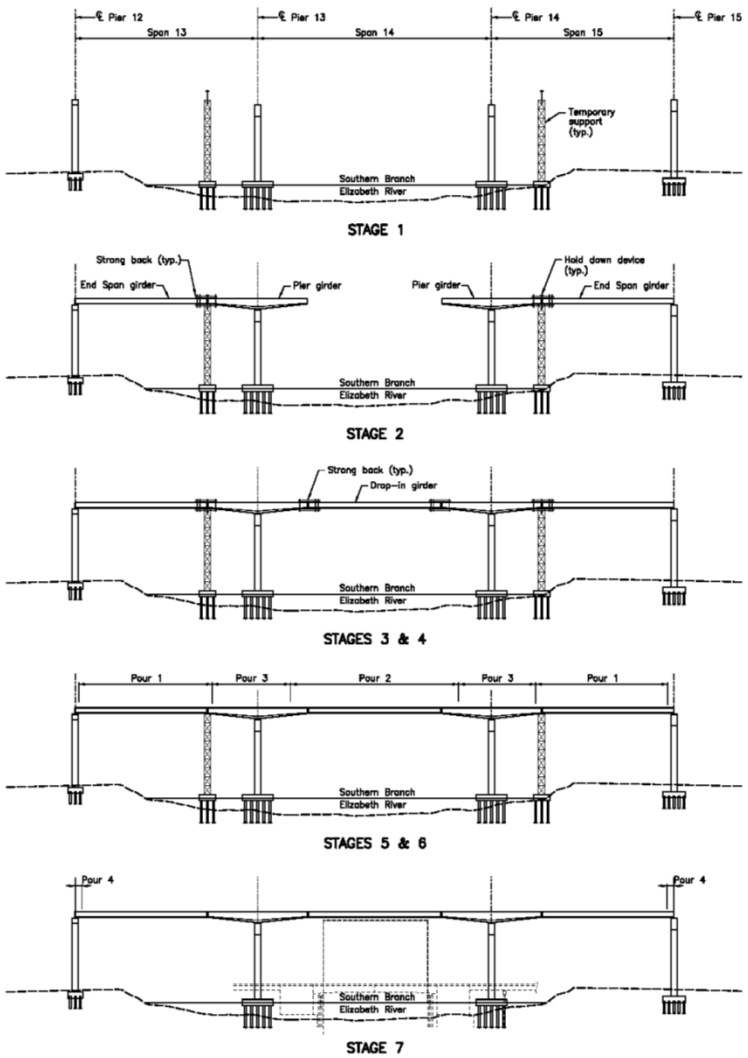

FHWA REGION	STATE	FEDERAL AID ROUTE	FEDERAL AID PROJECT	STATE ROUTE	STATE PROJECT	SHEET NO.
3	VA.	—		17	6017-131-108	48(191)

Construction Sequence:

Stage 1: Construct Piers 12 thru 15. Erect temporary supports in spans 13 & 15.

Stage 2: Erect pier girders at Piers 13 & 14. Once pier girders are in place, erect end span girders. Install temporary lateral wind bracing between girders as adjacent girders are erected. Check alignment of girders and secure position. Bearings at Piers 12 & 15 shall be temporarily locked in the longitudinal direction to prevent the girder from sliding longitudinally during construction.

Stage 3: Attach strong backs to each drop-in segment. Erect drop-in segments in span 14 and secure strong backs to pier segments. Install lateral wind bracing between girders as adjacent girders are erected. Cast diaphragms at Piers 13 & 14. Cast closures and splice diaphragms in spans 13 & 15 first, then closures and splice diaphragms in span 14.

Stage 4: First stage post-tensioning:
After closure pours reach 4000 psi strength, and after removal of bearing locking devices at Piers 12 & 15, fully stress Tendon T1. Stress the center girders first, and move outward to adjacent girders alternating to each side of centerline bridge, ending with the exterior girders. After Tendon T1 has been stressed in all girders, release vertical uplift restraint at temporary supports (Do not remove or adjust temporary supports). Fully stress Tendon T2 in similar order. Grout Tendons T1 & T2.

Stage 5: Remove strong backs. Adjust jacks at temporary supports in firm contact with girders. Erect deck forms in spans 13 thru 15. Cast deck Pours 1 & 2. After Pour 2, release jacks under temporary supports then proceed with Pour 3. Remove deck forms and temporary bracing after the deck has reached a minimum strength of 4000 psi.

Stage 6: Second stage post-tensioning:
Fully stress Tendon T3 after deck concrete strength has reached 4000 psi. Stress center girders first, and move outward to adjacent girders alternating to each side of centerline bridge, ending with the exterior girders. After Tendon T3 has been stressed in all girders, fully stress Tendon T4 in similar order. After Tendon T4 has been stressed in all girders, fully stress Tendon T5 in similar order. Remove temporary supports. Grout Tendons T3, T4 & T5 and place epoxy grout pour-back per PT special provisions.

Stage 7: Place end diaphragms together with Pour 4, barriers and overlay.

Note to Contractor:

Approach beams in spans 12 and 16 shall be erected after Unit D post-tensioning is complete.

Falsework Support Unfactored Reactions (per girder line)

Stage 2: 110 kip
Stage 3: 10 kip
Stage 4 – after stressing tendon 1: −15 kip *
Stage 4 – after stressing tendon 2: n/a
Stage 5 – after pour 1: 180 kip
Stage 5 – after pour 2: 20 kip
Stage 5 – after pour 3: n/a **

* negative value indicates restrained uplift
** remove falsework jacks prior to pour 3

Notes:

1. For deck pour lengths see sheets 76 and 86.
2. For additional notes regarding temporary works, see sheet 175.

ROUTE 17 OVER S. BRANCH ELIZABETH RIVER

COMMONWEALTH OF VIRGINIA
DEPARTMENT OF TRANSPORTATION
STRUCTURE AND BRIDGE DIVISION

SEQUENCE OF CONSTRUCTION
UNIT D
NORTHBOUND & SOUTHBOUND

No.	Description	Date
	Revisions	

Designed: BCB
Drawn: JS
Checked: VR

Date	Plan No.	Sheet No.
Aug. 2011	288-86	191

Scale: 1" = 60'-0" unless otherwise noted

© 2011, Commonwealth of Virginia

Bridge Animation – Spliced Girder Construction

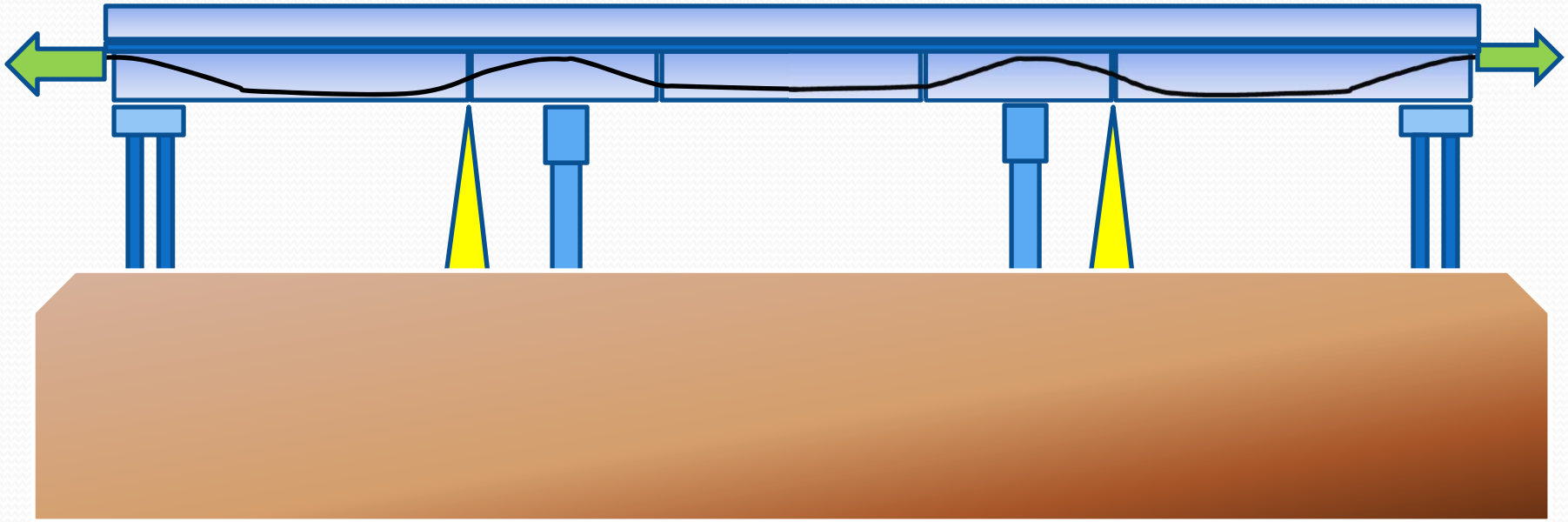

Route 17 over Cedar Road (Southbound-B612/Northbound-B613)

- Twin 3 span bridge structures composed of spliced girders
- 151'-200'-151' Spliced Girder Unit
- 108 – 16" precast concrete piles

Route 17 over Bainbridge Boulevard (Southbound-B610/Northbound-B611)

- Twin, Single Span 119' long bridges
- PCBT-69 Prestressed Concrete Girders with Integral Abutments
- 44 – 12" precast concrete piles

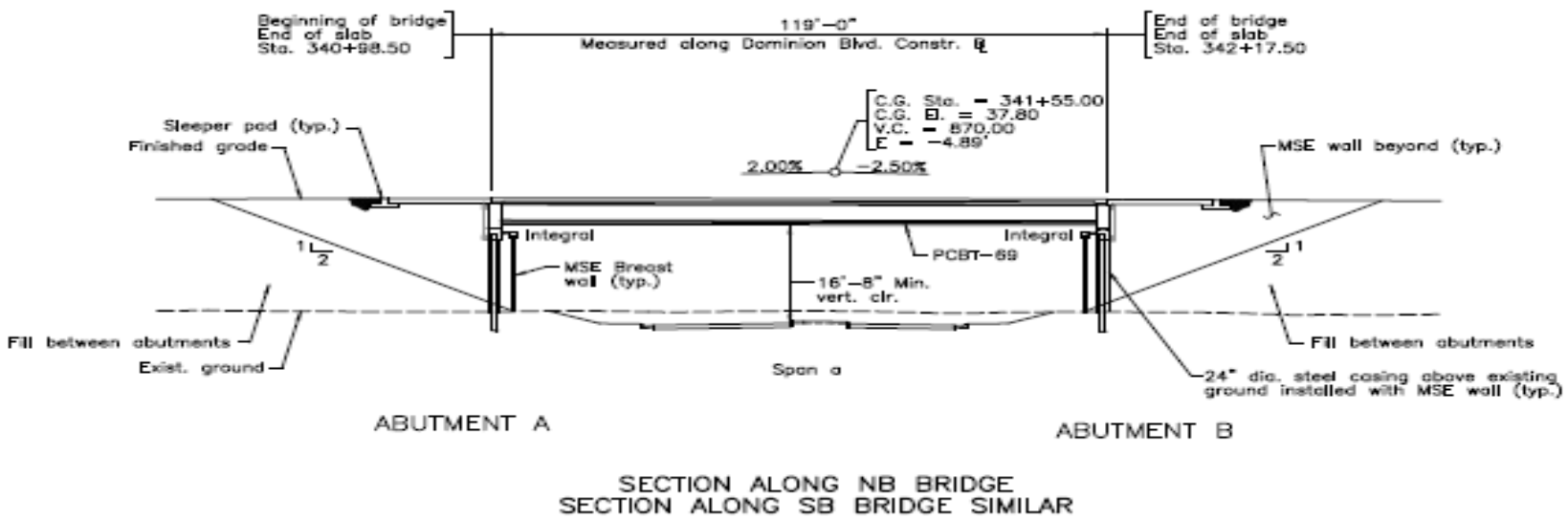

Route 17 over Great Bridge Boulevard (Southbound-B614/Northbound-B615)

- 2, Single Span 155'+/- long bridges
- PCBT-85 Prestressed Concrete Girders, simple spans, f'c = 10,000 psi
- 24 – 16" precast concrete piles (Southbound)
- 41 – 16" precast concrete piles (Northbound), flared deck with flared girder layout
- Ground improvement piles

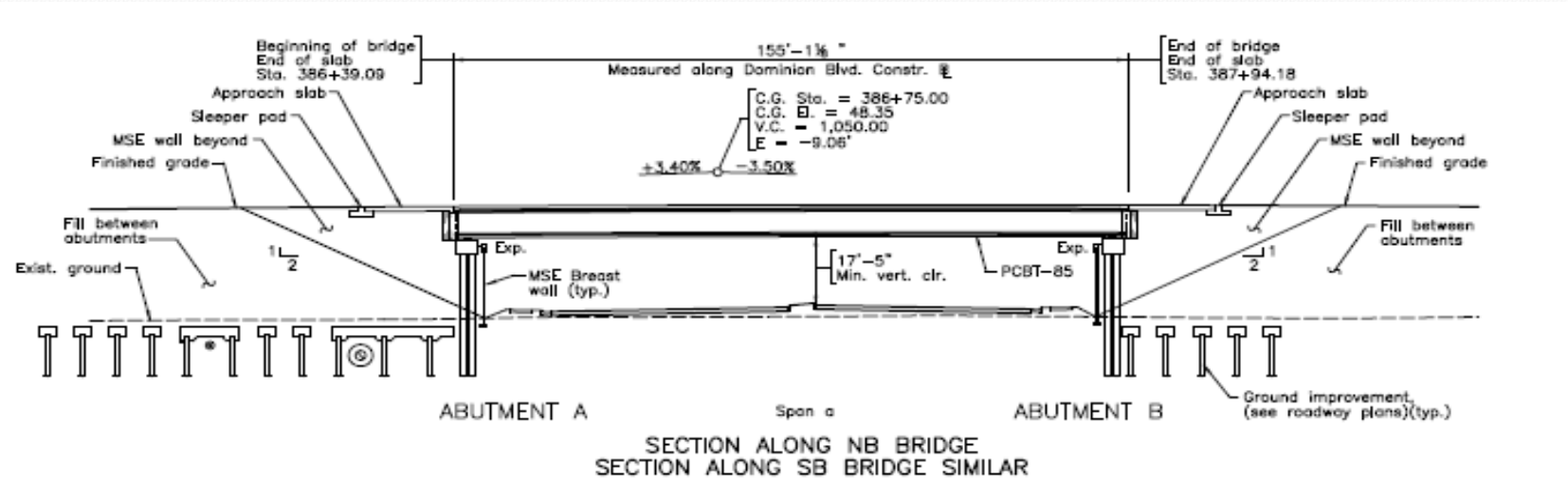

Ramp K over Ramp L – B616

- 2 span bridge composed of spliced girders (108'-108' Spliced Girder Unit)
- 1 Post Tensioned Integral Straddle Bent Cap
- 50 – 16" precast concrete piles
- Ground Improvement piles

Straddle Bent Construction

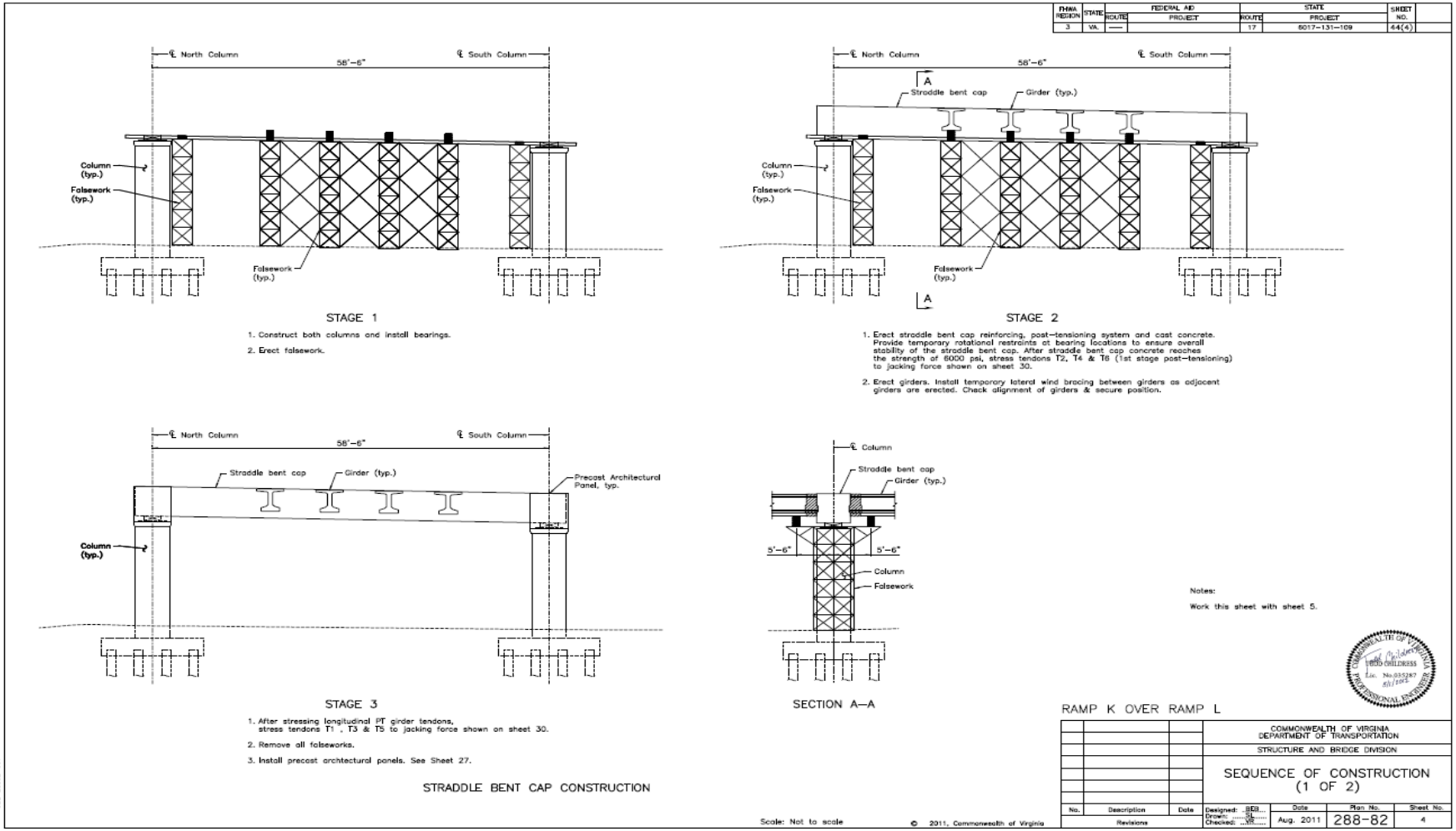

Ground Improvements (GI)

- 637, 12" square precast concrete piles
  - Lengths vary from 94' to 103'
  - 2 GI conditions – over utilities and under over-burden fill
    - Over utilities, piles have 2.5' thick mat footing
    - Soldier type piles have a reinforced precast pile cap (2.5' x 4.0' x 4.0') with pile socket, 6" deep

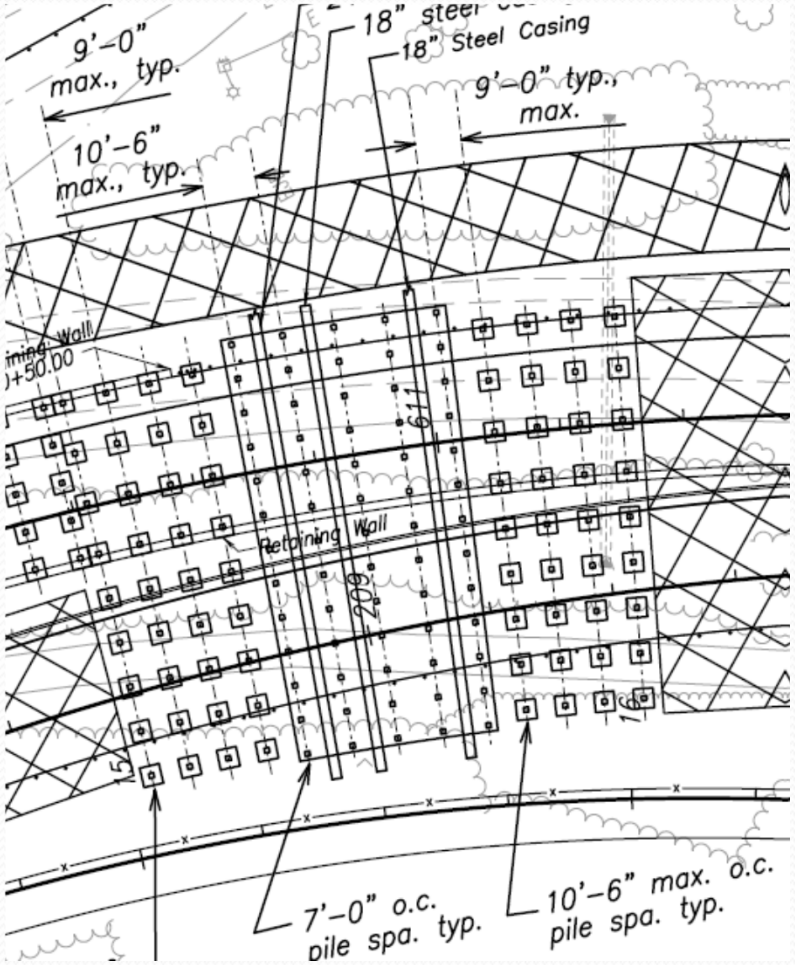

Soil Nail Walls

- 4 Soil Nail Walls – about 525 linear feet
  - Wall Heights up to 15'
  - Pre-production verification test nails
  - Load tests are critical – pullout tests for 1 out of every 20 soil nails to be proof tested
  - Soil Nail lengths from 20' to 34' long

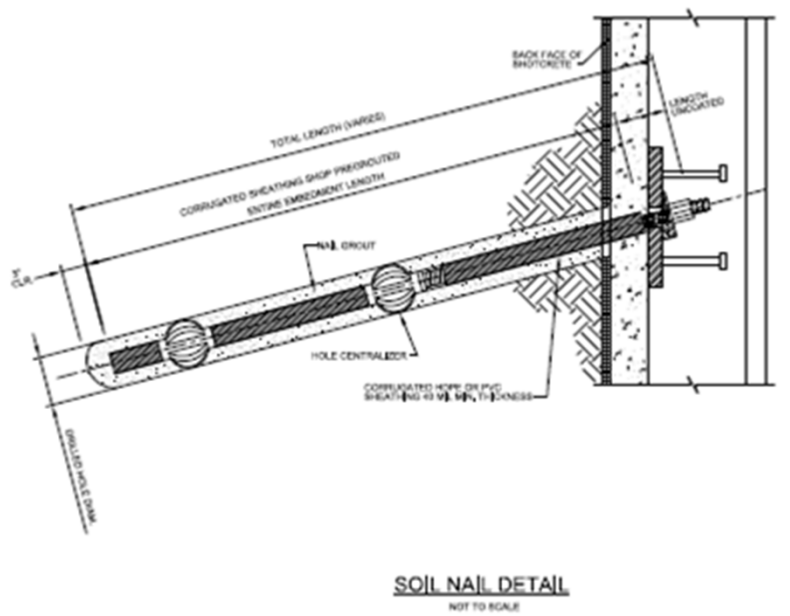

Retaining Walls

- 4 CIP Modified Retaining Walls
  - Modified RW-3 up to 14' tall

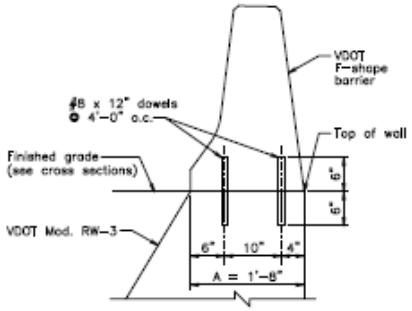

DETAIL A
Scale: 1" = 1'-0"

Modified RW-3 Retaining Wall Data Table				
Wall	Location	B (ft)	H (ft)	Factored brg. Pressure (ksf)
Ramp "P"	Begin Wall	6.55	10.91	3.37
	End Wall	4.80	8.00	2.89
Ramp "Q"	Begin Wall	8.20	13.67	4.10
	End Wall	6.21	10.35	3.24

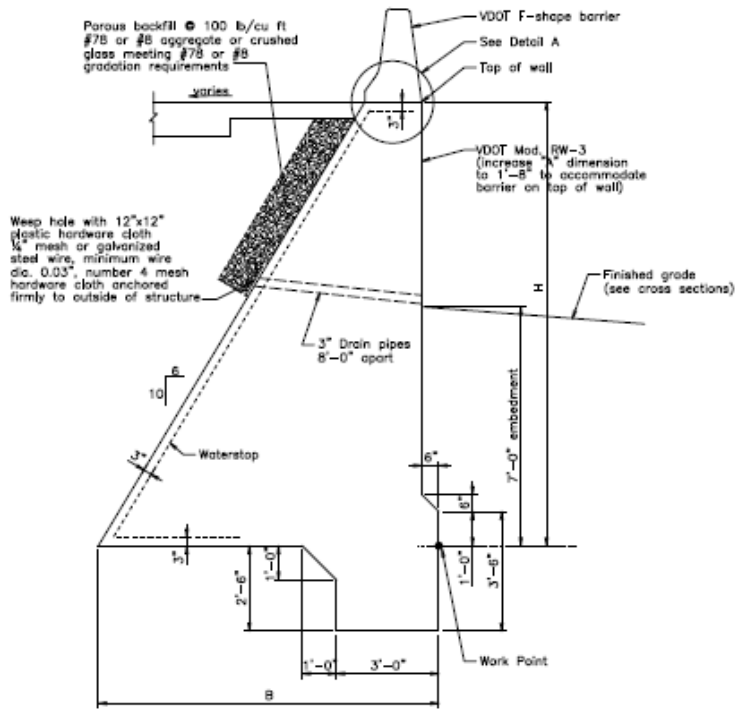

SECTION B–B
Scale: ½" = 1'-0"

New Technology/Innovation

- Usage of Embedded Data Collectors (EDC's) in Test Piles

Public Involvement

- For questions about the project, please contact:
- **Elizabeth Vaughn**
- Public Works Information Specialist
- City of Chesapeake, Public Works
- P: 757-382-6983
- www.CityofChesapeake.net/PublicWorks

Questions?